ELECTRIC STRIKE

ST125 SERIES

ORDERING INFORMATION

S ST125 F -24

- -24 — 24VDC
- F — Fail safe
- ST125 — Aluminum faceplate
- S — Stainless steel faceplate

EXAMPLE :

- ST125 – Aluminum face plate fail secure 12VDC
- SST125 – Stainless steel face plate fail secure 12VDC
- ST125F - Aluminum face plate fail safe 12VDC
- SST125F-24 – Stainless steel face plate fail safe 24VDC

FACE PLATE

- Aluminum - 124Lx32Wx1.5T mm
- Stainless steel - 165Lx32Wx1.5T mm

VOLTAGE / CURRENT DRAW

- Fail secure: 12VDC / 400mA
- Fail secure: 24VDC / 200mA (Specify on order)
- Fail safe: 12VDC/200mA
- Fail safe: 24VDC/100mA (Specify on order)

DOOR LATCH

- 5/8 " (15.8 mm)

INSTALLATION

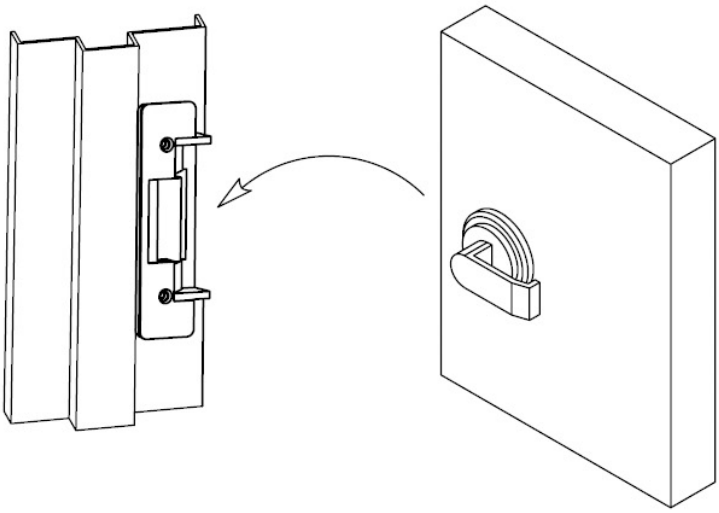

DIMENSIONS

- ST125 : 124Lx32Wx38H mm
  Keeper Depth: 16 mm

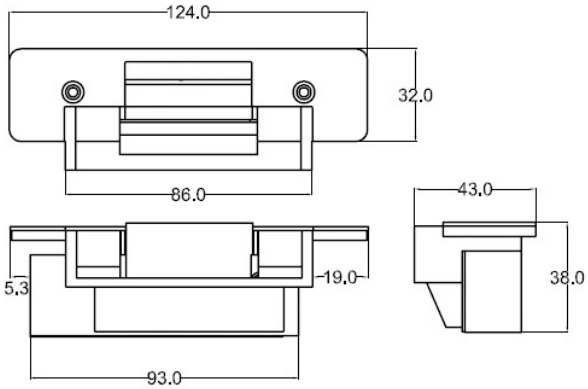

- SST125 : 165Lx32Wx38H mm
  Keeper Depth: 16 mm

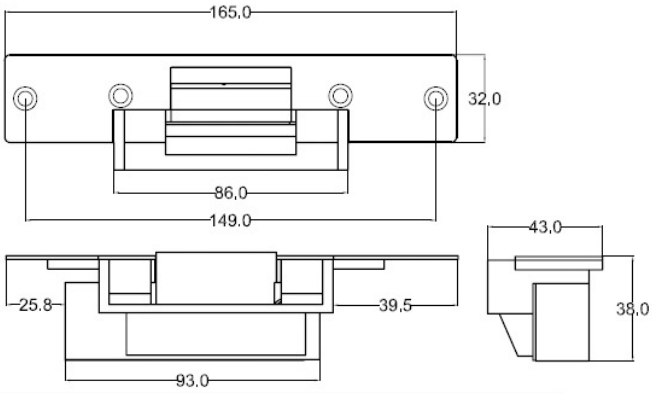

CE